DIMENSIONS

Unless otherwise specified, a tolerance of ±0.4mm applies to all dimensions.

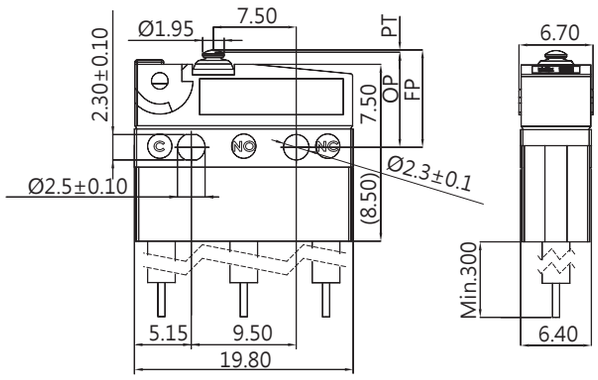

SW2 (IP67) SERIES

APPLICATIONS

Telephone, Air conditioner, Computer, Humidifier, Alarm, Time recorder, Mixer & Chopper, Solder gun, Neon phone, Fax machine, Joystick, Water pump, Gas detector, Pencil sharpener, Money sorter, Food processor, Electric knife, Toy car, Juice maker, Electric steak pan.

CERTIFICATE INFORMATION

Model Name	UL、cUL	ENEC
SW2-C1	0.1RA 125/250VAC uT55 1E4	0.1A 125/250VAC uT55 1E4
SW2-C3	3GPA 125/250VAC uT55 1E4	3A 125/250VAC uT55 1E4
SW2-06	5RA 30VDC uT55 1E4 6GPA 125/250VAC uT55 1E4	5A 30VDC uT55 1E4 6A 125/250VAC uT55 1E4
SW2-H10	5RA 30VDC uT55 1E4 10RA125/250VAC uT55 1E4 10GPA 125/250VAC uT55 1E4 1/4HP 125/250VAC uT55 1E4	5A 30VDC uT55 1E4 10(2)A 125/250VAC uT55 1E4

THE SELECTION OF RATING & FORCE

MODEL	Rating	L	S	H
SW2	0.1A	*	*	*
	3A	*	*	*
	6A	*	*	*
	1/4 hp 10A 10(2)A		*	*

NOTE：The Symbol " * " to represent the result is accepted

ORDERING INFORMATION

S W 2 — 0 6 S 1 — 0 0 0 0 E A 0 0 1 — Z

SERIES PREFIX	CODE	RATING CURRENT
	C1	0.1A 125/250 VAC
	C3	3A 125/250 VAC
	06	6A 125/250 VAC
	H10	10A 125/250 VAC
		10(2)A 125/250 VAC
		1/4 hp 125/250 VAC

CODE	OPERTING FORCE
H	HEAVIER
S	STANDARD
L	LIGHT

CODE	COVER TYPE
1	

CODE	ACTUATOR TYPE
00	
01	
02	
03	

CODE	WIRE SIDE
0	
R	
L	

CODE	CIRCUIT ARRANGEMENT
0	S.P.D.T
1	S.P.S.T NO
2	S.P.S.T NC

CODE	AWG TYPE
E	20
F	22
G	24
H	26

CODE	UL NUMBER
A	UL1007
B	UL1015
C	UL1430
D	UL1061
F	AV

SERIAL CODE

ROHS CODE

#NOTE				
1	RATING CURRENT	AWG TYPE	LEADS WIRE	OPERATING FORCE
	Code:C1	20~26	Min.30cm	L, S, H
	Code:C3	20~26	Min.30cm	L, S, H
	Code:06	20,22	Min.30cm	L, S, H
	Code:H10	20	Min.30cm	S, H
2	UL number code:F.AV wire(no safety).			